EXHIBIT 14

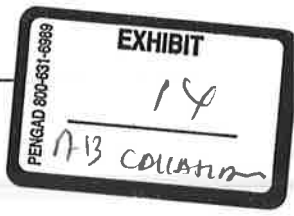

From: Callahan, Michael
To: Rubenson, Aaron; Lagoni, Michael; Kortekaas, Ryan; Rouse, Alex
Sent: 7/30/2012 9:49:52 AM
Subject: RE: AppStore Consessions Strategy
Attachments: IAP Concessions - Getting To Green Plan.pptx

Attaching the most current version of the "get to green" plan we put together last week. I suggest we go through this document and assign action items and due dates.

I'll print out a few copies as well.

-----Original Appointment-----
From: Rubenson, Aaron
Sent: Tuesday, July 24, 2012 9:34 AM
To: Rubenson, Aaron; Callahan, Michael; Lagoni, Michael; Kortekaas, Ryan; Rouse, Alex
Subject: AppStore Consessions Strategy
When: Monday, July 30, 2012 10:45 AM-11:30 AM (UTC-08:00) Pacific Time (US & Canada).
Where: CONF US SEA Day 1 South 03.104

CS and AppStore IAP Team have conducted a deep dive into IAP unwanted purchases and concessions, and have proposed solutions and built out a roadmap to resolve several big issues.

EXHIBIT 28

EXHIBIT 28 1/7/13 PENGAD 800-631-6989

CS KB content related to app or IAP refunds or refund related policies

blurb: appstore_inapp_refund_exception

Summary: Refund for accidental or unauthorized in-app purchases as a one-time exception

Hello,

I'm sorry to hear about the problem with this in-app order. As a standard policy, in-app items aren't returnable after purchase.

However, because [this was an accidental purchase / of the circumstances], I've issued a refund in the amount of $[AMOUNT] as a one-time exception. This refund should go through within the next 2-3 business days and will apply to the payment method used for the order. After the refund has been issued, your in-app item will no longer be available.

Once processed, you can see your refund here:

www.amazon.com/gp/digital/your-account/order-summary.html?orderID=[ORDER ID]

[FOR KINDLE FIRE: To turn off in-app purchasing on your Kindle Fire, launch Amazon Appstore for Android by tapping "Apps," then "Store." Tap the "Menu" icon, select "Settings," then "In-App Purchasing" and un-check the box next to "Allow In-App Purchasing."]

[FOR ALL OTHER ANDROID DEVICES: To turn off in-app purchasing, open the Amazon Appstore for Android app, tap "Menu," then "Settings." Select "In-App Purchasing" and un-check the box.]

I hope this helps! We look forward to seeing you again soon.

blurb: appstore_inapp_refund_no

Summary: Can I return in-app items after I've purchased them?

Hello,

In-app items aren't returnable or refundable after purchase.

If you need help accessing or using your in-app content, please contact Customer Service via phone or e-mail using the link below:

http://www.amazon.com/gp/help/contact-us/apps-help.html

Thanks for your interest in Amazon Appstore. We look forward to seeing you again soon.

blurb: appstore_android_refund_exception

Summary: Refunds on IAP Purchase Policy

Hello,

I'm sorry there was a problem with "[TITLE]." As a standard policy, Appstore purchases aren't returnable after purchase.

However, because [this was an accidental purchase / we couldn't find a solution / of the circumstances], I've issued a refund in the amount of $[AMOUNT] as a one-time exception. This refund should go through within the next 2-3 business days and will apply to the payment method used for the original purchase. After the refund has been issued, "[TITLE]" will be removed from your app library.

Once processed, you can see your refund here:

www.amazon.com/gp/digital/your-account/order-summary.html?orderID=[ORDER ID]

I hope this helps! We look forward to seeing you again soon.

blurb: IAP_Refunds_on_IAP_Purchases

Summary: Refunds on IAP Purchase Policy

According to Amazon policy, refunds are not available for digital goods. If a user has a valid reason for a refund (e.g. the app is not compatible with their device) they should contact Amazon Customer Service.

blurb: appstore_android_parental_controls_reset

Summary: When customers clear the Appstore's cache or app data, parental controls are also reset. To continue to block in-app purchasing, they will need to re-enable parental controls. {keywords: cache, settings, in-app, refund, app data, error, turn-off}

Instructions: FOR ANDROID DEVICES ONLY; DO NOT USE FOR KINDLE FIRE: Before issuing any refunds, confirm that the customer has recently cleared the Appstore's cache or app data and explain that you're making an exception given the circumstances. Take note of this in your annotation and also walk the customer through re-enabling Appstore parental controls (Menu> Settings > Parental Controls).

Hello,

Appstore parental controls are reset when you clear your cache or app data. [ADD IF CUSTOMER IS UPSET: I'm really sorry for any inconvenience this has caused.]

To turn parental controls back on, launch the Appstore App, tap "Menu," "Settings" then "Parental Controls" and check the "Enable" box.

[IF ISSUING REFUND, ADD: Because of the circumstances, I've issued a refund in the amount of $[AMOUNT] for "[IN-APP ITEM]" as an exception. This refund should go through within the next 2-3 business days and will apply to the payment method used for the original purchase.

Once processed, you can see your refund here:

www.amazon.com/gp/digital/your-account/order-summary.html?orderID=[ORDER ID]]

I hope this helps. We look forward to seeing you again soon.

blurb: IAP_Pro-rated_Refunds_on_Subscriptions

Summary: Can customers cancel an IAP subscription for a pro-rated refund

When a customer purchases a subscription are they able to cancel the subscription and receive a pro-rated refund?

IAP Subscriptions are paid for prior to the subscription period. If a user turns off auto-renew, the current subscription period will continue until it expires. This is referred to as "stopping auto-renew", not "cancelling".

In general, digital content purchased and/or downloaded from Amazon.com is not returnable. However, to ensure the appropriate steps are taken to address customer concerns or questions related to the Amazon experience, customers should be directed to customer service.

policy: Appstore / In-App Purchasing (issues #5 and #13)

Specific Issues:

1. Can I turn off in-app purchasing?
2. Do I need to have Amazon Appstore installed in order to purchase in-app items?
3. Can I see or purchase in-app items on Amazon.com?
4. Can I provide reviews for in-app items?
5. Can I return in-app items after I've purchased them?
6. How do I change the cc use d to make in-app purchases?
7. Can I see the in-app items I've previously purchased?
8. Can I see which device purchased an in-app item?
9. Can I give an in-app item as a gift?
10. What kind of in-app items can be purchased in Appstore?
11. How can I purchase an in-app item in Appstore?
12. How do I know if the in-app item requires a file download in order to work?
13. My child purchased an in-app item.
14. I didn't get my item after I purchased it.
15. My Appstore parental controls aren't blocking in-app purchases anymore

Issue	What to do	What to say
1. Can I turn off in-app purchasing?	To turn off in-app purchasing, open Amazon Appstore and tap the Menu button. Select "Settings" and tap "In-App Purchasing." Uncheck the box titled "Allow In-App Purchasing."	**Phone:** • "To turn off in-app purchasing, uncheck the box titled "Allow in-app purchasing" in the Settings of Amazon Appstore." **Email:** • appstore_inapp_turn_off

2. Do I need to have Amazon Appstore installed in order to purchase in-app items?	Yes, in-app purchasing requires Amazon Appstore be installed on the customer's Android device.	**Phone:** • "In-app purchasing requires Amazon Appstore be installed on your Android device." **Email:** • appstore_inapp_install_required
3. Can I see or purchase in-app items on Amazon.com?	At this time, in-app content can only be viewed and purchased from within the app.	**Phone:** • "At this time, in-app content can only be viewed and purchased from within the app." **Email:** • appstore_inapp_avail_web_no
4. Can I provide reviews for in-app items?	Amazon Appstore doesn't support reviewing in-app items as these products don't have a product detail page on Amazon.com.	**Phone:** • "At this time, Amazon Appstore doesn't support reviewing in-app items." **Email:**

		• appstore_inapp_review_no
5. Can I return in-app items after I've purchased them?	In-app items aren't returnable or refundable after purchase.	**Phone:** • "In-app items aren't returnable or refundable after purchase. We provide this information at the time of purchase and in the Amazon Appstore Terms of Use." **Email:** • appstore_inapp_refund_no
6. How do I change the credit card used to make in-app purchases?	Customers can change their credit card on the Manage Addresses and 1-Click Settings page: http://www.amazon.com/gp/css/account/address/view.html	**Phone:** • "You can change your credit card on the Manage Addresses and 1-Click Settings page." **Email:** • appstore_inapp_cc_change
7. Can I see the in-app items I've previousl	Customers can see in-app items they've purchased by visiting the Your Digital Orders page.	**Phone:** • "You can see in-app items you've purchased by visiting the following page

y purchased?		and selecting "Your Digital Orders." **Email:** • appstore_inapp_past_purchases
8. Can I see which device purchased an in-app item?	This isn't currently a supported feature of in-app purchasing.	**Phone:** • "At this time, Amazon Appstore doesn't support the functionality that allows you to see what device purchased an in-app item. I apologize for any inconvenience this may cause." **Email:** • appstore_inapp_device_which
9. Can I give an in-app item as a gift?	This isn't currently a supported feature of in-app purchasing. Customers can purchase an Amazon Digital Entertainment Gift Card that can be used on any item shipped and sold by Amazon.com, including Amazon Appstore purchases: http://www.amazon.com/gp/feature.html/?docId=1000708691	**Phone:** • "At this time, Amazon Appstore doesn't support the functionality that allows you to give an in-app item as a gift. I apologize for any inconvenience this may cause." • "If you'd like to give

		Appstore content as a gift, you can purchase an Amazon Digital Entertainment Gift Card." **Email:** • appstore_inapp_gift_no
10. What kind of in-app items can be purchased in Appstore?	**Multi-device** items are items that are purchased once, never expire, and can be accessed on all eligible devices associated with your account. An example of a multi-device item is a single magazine issue. **Single-device** items are items that can be purchased multiple times, can be "consumed," and are only accessible on the device that makes the purchase. Examples of a single-device item are coins, stars, or other in-game currencies. **Subscription** items are similar to a multi-device item, except that they are bound by a period of time and involve a recurring charge. An example of a subscription item is a subscription to a monthly magazine.	**Phone:** • "There are three types of in-app items available for purchase in Amazon Appstore apps, multi-device items, single-device items, and subscription items." **Email:** • appstore_purchases_inapp_which
11. How can I purchase an in-app item in Appstore?	Tap the purchase button from within the application's storefront. When you tap this button, you'll see the in-app detail page and a purchase confirmation screen.	**Phone:** • "To purchase an in-app item, tap the purchase button from within the application's storefront." **Email:**

		• appstore_purchases_inapp_how
12. How do I know if the in-app item requires a file download in order to work?	If an item requires a file download, customers will see the text "This item requires a file download after the purchase completes" on the in-app detail page.	**Phone:** • "If an item requires a file download, you will see the text "This item requires a file download after the purchase completes" on the in-app detail page." **Email:** • appstore_android_subscriptions
13. My child purchased an in-app item.	Check for previous refunds and annotations on previous customer contacts. If this is the first contact: 1) Refund the in-app purchase(s) in question and explain this is a one-time exception 2) Educate the customer about using Appstore parental controls (Menu> Settings > Parental Controls). For Kindle Fire, explain how to disable in-app purchasing (Apps > Store > Menu > Settings > In-app purchasing). 3) Annotate the customer's account explaining you made the one-time exception and educated the customer If the customer has had an in-app item refunded in the last 12 months: 1) Explain that digital purchases aren't	**Phone:** • If refunding: "Because of the circumstances, I've issued a refund in the amount of $[AMOUNT]." If not eligible for refund: "Because we've already made an exception to our policy, we're not able to refund this purchase. You can set your parental controls to prevent unauthorized in-app purchases in the Settings section of Amazon Appstore."

	returnable after purchase 2) Walk the customer through enabling Appstore parental controls (Menu> Settings > Parental Controls). For Kindle Fire, explain how to disable in-app purchasing (Apps > Store > Menu > Settings > In-app purchasing).	**Email:** • appstore_inapp_refund_exception appstore_inapp_refund_no appstore_inapp_turn_off appstore_inapp_parental_controls
14. I didn't get my item after I purchased it.	There is a bug that affects a small percent of in-app purchases from being delivered. 1. Research the account and annotations to see if the customer has been previously refunded. 2. Refund the customer unless research shows previous refunds for the same issue. If the customer has already received refunds for this issue, please let them know we'll be automatically initiating refunds for these items within 2 weeks and the customer should expect a refund at that time (the Appstore team repeats this refund process every 2 weeks). Our technical teams are aware of this issue and are working on a fix.	**Phone:** • "I'm sorry for the trouble you had when [SUMMARIZE CUSTOMER'S PROBLEM]. I've reported this to our technical team, and they're working on taking care of it." **Email:** • appstore_problem_known
15. My Appstore parental controls aren't blocking in-app purchases anymore.	Clearing the Appstore's cache or app data on **non-Kindle devices** will reset parental controls and restore in-app purchasing. Customers who have recently cleared these files will need to go back into their Appstore settings to re-enable parental controls or turn off in-app purchasing. Before issuing any refunds, explain that you are making an exception given the circumstances and take note of this in your annotation. Walk the customer through re-	**Phone:** • "I'm sorry about this. Appstore parental controls are reset when you clear your cache or app data. Select "Menu," "Settings," then "Parental Controls" and check the "Enable" box to turn off in-app purchasing again."

	enabling Appstore parental controls (Menu> Settings > Parental Controls).	• "Because of the circumstances, I've issued a refund in the amount of $[AMOUNT]." **Chat:** appstore_android_parental_controls_reset **Email:** appstore_android_parental_controls_reset

Related Material:

Policies:

Appstore / PIN & Parental Controls
Appstore / Fire / Troubleshooting
Appstore / Subscriptions

References:

Appstore / Fire / Download / Howto
Appstore / Fire / Delete / Howto
Appstore / Fire / Purchase / Howto
Appstore / PIN & Parental Controls / Howto
Appstore / Subscriptions / Howto

Related content references: (9)
Appstore / Fire / Subscription / Auto Renew / off / on
Appstore / Fire / Delete / Howto
Appstore / PIN & Parental Controls / Howto
Appstore / Fire / Download / Howto
Appstore / Fire / Purchase / Howto
Appstore / Fire / Purchase Subscription / Howto
Appstore / PIN & Parental Controls

Appstore / Subscriptions
Appstore / Fire / Troubleshooting

policy: Appstore / Fire / Troubleshooting (issue # 12)

Summary: Troubleshooting common Appstore on Kindle Fire questions.

Specific Issues:

1. My app isn't showing in my App Library.
2. Can I access Google Play on Kindle Fire?
3. I'm seeing an error message saying "Your device is no longer configured correctly to play Amazon videos. Please contact Customer Service at 1-888-802-3080."
4. Will my previously purchased apps work on Kindle Fire?
5. Do I have to buy my apps again for Kindle Fire?
6. Can I get apps for Kindle Fire before I receive it?
7. Where can I find apps that are available with Kindle Fire?
8. What kinds of apps won't work on Kindle Fire?
9. How can I change the credit card used on app purchases?
10. How can I add a gift card to my account?
11. Can I set up parental controls for all Appstore purchases?
12. I accidentally bought an app and I'd like a refund.
13. I want to provide a review for an app.
14. Why do you need a credit card on file for [free] purchases?
15. I'm a U.S. customer traveling internationally. Can I buy and download apps from Appstore?
16. My download is frozen/stuck.
17. I can't access my Appstore content/I'm seeing a "connectivity issue" error message.

Issue	What to do	What to say
1. My app isn't showing in my App Library.	1. Check order in CSC to verify it has successfully completed. If order	**Phone:** • "I've researched this app and verified it's available with Kindle Fire. Let's check your Cloud Library to see if it's

	hasn't completed, ask customer to update their payment method and retry the order. If order has completed, move to step 3. 2. Tap the Settings icon from the Home screen and select "Sync." 3. Verify the customer has the latest software. 4. Verify app is on Kindle Fire via Appstore for Web. Search for app in "Kindle Fire" category. 5. If no, send appstore_fire_app_available_no. If yes, proceed to step 6. 6. Confirm the customer is connected to wireless. Settings > Device > Storage 7. If app is available, be sure customer has "Cloud" selected when in Library (text will be orange). 8. If app is not located in the Cloud Library, it may have been purchased on another account. If app is available, provide instructions for downloading. 9. If app is not available file ticket	stored there." • "I've looked into the app's detail page and this app isn't available on Kindle Fire. This app can only be used on a compatible Android device." **Email:** • appstore_fire_app_available_no
2. Can I access	Google Play isn't available on Kindle Fire. Apps purchased	**Phone:**

Google Play on Kindle Fire?	from Google Play will not be accessible.	• "Access to Google Play isn't available on your Kindle Fire." **Email:** • appstore_fire_google_play_no
3. I'm seeing an error message saying "Your device is no longer configured correctly to play Amazon videos. Please contact Customer Service at 1-888-802-3080."	Transfer to Kindle	**Phone:** • " Please hold while I transfer you to Kindle Support" **Email:** • kindle_tablet_rooted_no
4. Will my previously purchased apps work on Kindle Fire?	Previously purchased apps available on Kindle Fire will be available in the Library of the device.	**Phone:** • "You can find and install apps available on Kindle Fire from the Cloud Library in the Apps tab." **Email:** • appstore_fire_apps_previous_purchas

		e
5. Do I have to buy my apps again for Kindle Fire?	No, after you purchase apps from the Amazon Appstore once you can use them on any device connected to your account, on which the apps are available.	**Phone:** • "You can access any previously purchased apps from Appstore on any device as long as the apps are available with that device." **Email:** • appstore_fire_apps_purchase_again
6. Can I get apps for Kindle Fire before I receive it?	You can purchase apps from Appstore at any time as long as you have an Android device registered to your account.	**Phone:** • "You can order apps from Amazon Appstore as long as you have an Android device registered to your account." **Email:** • appstore_fire_purchase_apps_before_delivery
7. Where can I find apps that are available on Kindle Fire?	To browse apps for Kindle Fire before it ships, visit www.amazon.com/appstore and click "Apps for Kindle Fire." To search for Kindle Fire apps, simply perform a search	**Phone:** • "To browse apps for Kindle Fire before it ships, visit www.amazon.com/appstore and click "Apps for Kindle Fire."

	and click the "Kindle Fire Compatible" checkbox on the lower left side of the page. Note: The Appstore on Kindle Fire automatically filters out unavailable apps.	**Email:** • appstore_fire_shop_available_apps_only
8. What kinds of apps won't work on Kindle Fire?	The categories of apps that will not run on Kindle Fire are: • Wallpapers and Themes • Keyboard apps • Launcher apps • Apps that require root access to function properly • Apps that rely on the Google Mobile Suite of applications to function properly (e.g. Google Maps) • Apps that are not available on the Kindle Fire hardware specifications	**Phone:** • "Apps that aren't available on the Kindle Fire hardware specifications, apps that rely on the Google Mobile Suite and keyboard apps generally won't work on Kindle Fire." **Email:** • appstore_fire_apps_available

9. How can I change the credit card used on app purchases?	Instruct customer to update their 1-Click payment settings in Your Account: http://www.amazon.com/gp/mas/your-account/myapps/oneclicksettings	**Phone:** • "Sign into Your Account on Amazon.com to update your 1-Click settings." **Email:** • appstore_android_1click_update
10. How can I add a gift card to my account?	Tap Apps > Store > Menu icon > Settings > Gift Cards Enter GC or promo code and tap "Redeem."	**Phone:** • "To enter a gift card or promotional code, tap Apps from the Kindle Fire Home screen. Tap "Store" and select the Menu icon. Select "Settings," then "Gift Cards." Enter your code and tap Redeem." **Email:** • appstore_fire_gc_add_how
11. Can I set up parental controls for all Appstore purchases?	Parental controls can be turned on in the main Settings menu on the Kindle Fire home screen.	**Phone:** • "Parental controls can be turned on in the Settings menu." **Email:** • kindle_tablet_parental_controls

12. I accidentally bought an app and I'd like a refund.	Amazon Appstore policy states that all Appstore purchases are final. Customers are now prompted to purchase apps with a 2-Click process to avoid accidental purchases. If you feel an exception is warranted, you can refund the purchase as a one-time exception.	**Phone:** • "I've made an exception to our policy and requested a refund in the amount of $[AMOUNT] to the original payment method used for your purchase." • "Purchases from Amazon Appstore are non-returnable and non-refundable." **Email:** • appstore_android_refund_exception • appstore_android_refund_no
13. I want to provide a review for an app.	Visit the item's detail page from Kindle Fire and tap "Reviews." Tap "Create Your Own Review" and you'll see a screen to rate and review an app.	**Phone:** • "To leave a review for an app, visit the app's detail page and tap "Reviews." From here, tap "Create Your Own Review" and fill in the fields." **Email:** • appstore_fire_app_review_how
14. Why do you need a credit card on file for [free] purchases?	We ask our customers to enter a payment method to set up Digital 1-Click payment settings and verify a U.S. billing address. You can use a credit card or a Gift Card with	**Phone:** • "We ask our customers to enter a payment method to set up Digital 1-Click payment settings and verify a U.S. billing address. You can use a

	a valid balance as your 1-Click payment method.	credit card or a Gift Card with a valid balance as your 1-Click payment method." **Email:** • digital_cc_why • appstore_android_1click_update
15. I'm a U.S. customer traveling internationally. Can I buy and download apps from Appstore?	U.S. customers traveling internationally will still have access to purchase and download Amazon Appstore for Android content.	**Phone:** • "Apps can only be purchased by U.S. customers with a U.S. billing address and credit card, or an Amazon Gift Card." **Email:** • appstore_us_cust_travel_intl
16. My download is frozen/stuck	1. Check Wi-Fi connection for strong signal 2. Force Stop Amazon Appstore application: Quick Settings > More > Applications > Filter by All Applications > Appstore > Force Stop. 3. Perform a restart: press and holding the power button for 20 seconds and then	**Phone:** • "Performing a restart on your Kindle Fire may resolve issues like a frozen screen or trouble downloading content to your Kindle Fire." **Email:** • kindle_tablet_restart

	release. After the device has completely turned off, press the power button to restart the Kindle Fire. 4. Clear Cache: Quick Settings > More > Applications > Filter by All Applications > Appstore > Clear Cache 5. Try to download App. 6. If this does not work File a ticket.	
17. I can't access my Appstore content/I'm seeing a "connectivity issue" error message.	This can happen if the date/time on Kindle Fire are incorrect. To check/update the date and time: 1. Tap the Settings icon at the top of the Home screen 2. Tap "Date and Time" 3. You'll see a toggle switch for On/Off next to "Automatic" 4. Tap "Off" 5. Change the values to reflect the current date and time if it's incorrect 6. Verify the correct time zone is displayed at the bottom of the screen	**Phone:** • "Let's check the date and time on your Kindle Fire and make sure it's correct." **Email:** • kindle_tablet_time_howto

Related Material:

Policies:

Appstore / PIN & Parental Controls
Appstore / Subscriptions
Appstore / In-App Purchasing

References:

Appstore / Fire / Download / Howto
Appstore / Fire / Delete / Howto
Appstore / Fire / Purchase / Howto
Appstore / PIN & Parental Controls / Howto
Appstore / Subscriptions / Howto
[[Reference: Appstore / InApp Purchasing / Howto]]

Related content references: (11)
Appstore / Fire / Subscription / Auto Renew / off / on
Appstore / Fire / Delete / Howto
Appstore / PIN & Parental Controls / Howto
Appstore / Fire / Download / Howto
Appstore / Fire / Purchase / Howto
Appstore / Fire / Purchase Subscription / Howto
Appstore / PIN & Parental Controls
Kindle / Content / Refunds 30 Day Limit
Appstore / Subscriptions
Appstore / In-App Purchasing
Fire / Tier 2 Transfer Guide

EXHIBIT 31

From: Callahan, Michael
To: Lagoni, Michael; McKeague, Sean; Rouse, Alex
Sent: 10/22/2012 10:06:52 AM
Subject: RE: In-app purchases being called out in product details



I know folks are very busy. I'd think - given our current CPU performance against target - we might be able to fit this in with some of the work Alex is driving?

From: Lagoni, Michael
Sent: Monday, October 22, 2012 9:15 AM
To: Callahan, Michael; McKeague, Sean; Rouse, Alex
Subject: RE: In-app purchases being called out in product details

I think it's a good idea and has been discussed in the past. However the engineering resources are stretched pretty thing right now

From: Callahan, Michael
Sent: Monday, October 22, 2012 9:02 AM
To: Lagoni, Michael; McKeague, Sean; Rouse, Alex
Subject: RE: In-app purchases being called out in product details

Awesome - thank you.

So, would some kind of icon for IAP get any traction or is that idea dead on arrival?

From: Lagoni, Michael
Sent: Monday, October 22, 2012 8:52 AM
To: McKeague, Sean; Callahan, Michael; Rouse, Alex
Subject: RE: In-app purchases being called out in product details

Okay that sounds great. Thanks, Sean.

From: McKeague, Sean
Sent: Monday, October 22, 2012 8:52 AM
To: Lagoni, Michael; Callahan, Michael; Rouse, Alex
Subject: RE: In-app purchases being called out in product details

Sorry, I was just chiming in on the previous response.

Skylanders had the text on both, but it failed publishing because it went over the text limit. I've fixed it and am publishing now. We'll have a report by Wed to help us identify and fix these.

From: Lagoni, Michael
Sent: Monday, October 22, 2012 8:42 AM
To: Callahan, Michael; Rouse, Alex; McKeague, Sean
Subject: RE: In-app purchases being called out in product details

Thanks, Michael.

Sean - I just checked CIC and Skylander's only has the disclaimer on the Amazon Short Description.

Zynga Poker doesn't have IAP, so we're okay on that one.

-Michael

From: Callahan, Michael
Sent: Monday, October 22, 2012 8:39 AM
To: Lagoni, Michael; Rouse, Alex; McKeague, Sean
Subject: RE: In-app purchases being called out in product details

The two lower links don't appear to have the disclaimer at all. Are we missing it?

http://www.amazon.com/Skylanders-Patrol-Kindle-Tablet-Edition/dp/B008Z666Q8

http://www.amazon.com/Zynga-Poker-Kindle-Tablet-Edition/dp/B0069F2RCE

1. If we can make sure every IAP app has the disclaimer, big win.

2. If we can brainstorm some ways to make the IAP disclaimer being more prominent w/o it becoming a buzz kill, that'd be great too. But Im more concerned with consistency.

From: Lagoni, Michael
Sent: Monday, October 22, 2012 8:36 AM
To: Callahan, Michael; Rouse, Alex; McKeague, Sean
Subject: RE: In-app purchases being called out in product details

+ Sean

Thanks for the note, Michael. Are you finding apps that don't have the disclaimer at all or the disclaimer is just at the bottom of a long description paragraph?

From: Callahan, Michael
Sent: Sunday, October 21, 2012 3:54 PM
To: Lagoni, Michael; Rouse, Alex
Subject: FW: In-app purchases being called out in product details

Hi Guys -

Is there a reason not all apps with IAP have the PLEASE NOTE: paragraph about IAP?

While we're on the topic, the disclaimer is sort of hidden in the midst of a lot of text (welcome to Amazon J). I'm wondering if there are more clever ways for making this prominent?

Have we considered an icon for IAP apps that quickly and easily tell customers the app has an IAP feature?

From: Reed, Wesley
Sent: Thursday, October 18, 2012 6:27 PM
To: Callahan, Michael
Cc: cs-psc-techemailleads@amazon.com <mailto:cs-psc-techemailleads@amazon.com>
Subject: In-app purchases being called out in product details

Hello Michael,

I have a question about the way the in-app purchase warnings appear (or don't appear) when viewing the product detail page for an app on the website.

Most apps that offer in-app purchases have the following disclaimer attached somewhere on the product detail page:

"PLEASE NOTE: This app lets you purchase digital content using actual money. On Kindle Fire, you can configure parental controls from the device Settings menu, and then selecting Parental Controls. On Android devices, you can configure in-app purchasing parental controls from the settings menu within the Amazon Appstore."

Example:

http://www.amazon.com/Beeline-Interactive-Inc-Smurfs-Village/dp/B0088QGB7Y

However, some others that are known to have in-app purchasing do not carry this disclaimer.

Examples:

http://www.amazon.com/Skylanders-Patrol-Kindle-Tablet-Edition/dp/B008Z666Q8

http://www.amazon.com/Zynga-Poker-Kindle-Tablet-Edition/dp/B0069F2RCE

The result is that CS has difficulty reliably determining which apps have this feature and which don't. Is there a way to standardize this and require every app with in-app purchasing to have the disclaimer clearly listed on the product detail page in both the Appstore app and the website, so that customers and CS will know for sure?

Example contact ID were the customer experience was affected by us not having consistency in this information:

23923741035 <https://cscentral.amazon.com/gp/stores/www.amazon.com/gp/cs-search/?searchMethod=contactId&searchCriteria=23923741035>

Thank you for looking into this.

Wesley Reed

Digital Lead

Bassett Hounds

Tuesday - Saturday 1300 - 2200

EXHIBIT 44

From: Rubenson, Aaron
To: May, Johanna; Paleja, Ameesh
Sent: 2/11/2011 6:19:58 PM
Subject: FW: Apple Faces Scrutiny Over In-App Purchases By Kids



We need to think this through for our IAP implementation. I haven't read your press releases yet Jo (but they are printed out for the plane ride!). Did you include parental controls as part of IAP? We may need to…

>>> <<<

Apple Faces Scrutiny Over In-App Purchases By Kids

By Ryan Kim Feb. 8, 2011, 1:46pm PST

While publishers are grumbling about Apple's new enforcement of in-app purchases for content, parents and one lawmaker are also raising questions about the way Apple handles in-app payments in apps aimed at children. According to the Washington Post, Rep. Edward J. Markey (D - MA) on Tuesday urged the Federal Trade Commission to review the way Apple markets its apps because of questions about the ease with which children are buying items in games.

The issue stems from a story in the Washington Post that showed how children were racking up big in-app purchases inside freemium iOS apps to the surprise of parents. My colleague Kevin wrote about this issue earlier after his step-daughter charged up $375 worth of virtual goods buys in a gaming app. There are parents controls that can limit children's ability to make purchase, but there is still one glaring loophole: if a parent enters their iTunes password for a purchase and hasn't restricted in-app payments, children using that device can make purchases for the next 15 minutes without having to enter a password.

One woman's daughter in the original Post story racked up $1,400 in charges on her mother's iTunes account, through Smurfberries purchases in the Smurfs' Village app. The woman later received a reimbursement, but the issue paints the in-app purchase boom in a new light. A report by app analytics company Distimo found that in-app purchases rivaled paid downloads as the top revenue source for developers last year.

While many games and apps are utilizing in-app purchase, some of the most successful are titles from social game makers. Of the top five grossing iPhone apps right now, three (Smurfs' Village, Tap Zoo and Zombie Farm) all use in-app purchases. Smurfs' Village and Tap Zoo are rated for 4-year-olds and up while Zombie Farm is rated for 9-year-olds. Technically, Apple says iTunes users must be 13 years old. In talking to some developers, they said this is an area they'd like to see Apple address. One said they would like to build in more protections for children and parents to prevent inadvertent purchases within the 15-minute window but they must work within Apple's current rules. Smurfs' Village and Tap Zoo have recently added warnings that virtual goods use actual money.

It would be easy for Apple to flip a switch and close the 15-minute window or allow parents to turn it off themselves through the iOS parental settings. Right now there is an option to restrict all in-app purchases, but that also prevents anyone who uses the phone to buy anything inside an app. And as some have noted, it's deep inside the setting menu where many aren't aware it's there. Apple responded to a request for comment by noting that "a password is required to buy any goods in the App Store including using in-app purchases and parents can

use our parental controls settings to restrict app downloading and turn off in-app purchasing."

I imagine Apple will address this either by implementing a new setting option for parents, or they'll renew their efforts to advertise the existing parental settings. But I doubt Apple will try to close the overall 15-minute window for all transactions because it would stifle purchases and add one more hurdle to impulse buys. The App Store sells because it's elegant, easy to use and there are few barriers to buying. And changing that would jeopardize Apple's 30 percent cut of all in-app purchases.

In the end, this won't be a major issue as long as Apple addresses it soon and parents wise up. As my colleague Colin Gibbs pointed out (subscription required), this is the early days of in-app payments and it's in Apple's best interest to establish more safeguards to assure parents. He drew a comparison to ringtones, which got a scammy reputation for going after underage consumers. I don't think we'll see in-app purchases decline in the way ringtones have but I do think that it makes sense to step up with more warning labels or spending limits to ensure nothing slows down the overall acceptance of legitimate in-app purchases. This is a big opportunity for both Apple and developers. Now it's just a matter of making sure the store remains an inviting place to do business for everyone involved.

Source:

http://gigaom.com/2011/02/08/apple-faces-scrutiny-over-in-app-purchases-by-kids/

EXHIBIT 130

From: Taylor, Amber
To: venezia-leads@amazon.com; Rouse, Alex
CC: Rubenson, Aaron; Kelton, Alana; Mathiesen, Thomas
Sent: 10/21/2011 5:29:49 PM
Subject: RE: IAP Marketing
Attachments: iap-launch-plan-101911-2.docx

Hi team,

We have updated the IAP marketing plan with three key updates:

· We will not be doing marketing / PR during Beta – we will plan a "big bang" marketing push with the GA of IAP

o If anything hits the blogs before GA, we'll address it on a case by case basis

· We've added even more merchandising including e-mail and mobile advertising (not in our own Appstore, don't worry J inclusion in mobile banner ads that we place through M&C Saatchi to be run on other free apps)

· We are planning to create a Newsstand category page, and we will not be creating an IAP specific feature doc

Let Alana and I know if you have any questions.

Thanks,

Amber

From: Taylor, Amber
Sent: Friday, September 30, 2011 5:00 PM
To: venezia-leads@amazon.com; Rouse, Alex
Cc: Rubenson, Aaron; Kelton, Alana; Mathiesen, Thomas
Subject: IAP Marketing

Hi all,

Attached please find the marketing plan to support IAP for review. As you'll see, this includes outreach/support during beta and GA as well as on site merchandising planning. This has already been through the merchandising team, VM, AM/Business Development, and Alex. We will of course be flexible with our efforts. If you have any questions on the plan as it stands, please let me know.

Thanks,

Amber



From: Liang, Jonathan
Sent: Monday, September 26, 2011 1:59 PM

To: Rubenson, Aaron; venezia-leads@amazon.com; Peracha, Zahur; Sands, Rob; Kelton, Alana; Taylor, Amber; Mathiesen, Thomas; Rouse, Alex
Cc: May, Johanna; Okereke, Mekka; McKeague, Sean; Kortekaas, Ryan; Evans, Ethan; Bianco, Antonio; Paleja, Ameesh; Adkins, James; Overton, Adam; Maroo, Bhavyesh; Mehta, Chirag
Subject: RE: Venezia Leads Meeting

Hi all,

Please see latest IAP status here - https://portal.ant.amazon.com/sites/venezia-dev/Shared%20Documents/Planning/IAP/IAP%20Weekly%20Status/IAP%20Status%20092611.docx

Thank you

Jonathan

-----Original Appointment-----
From: Rubenson, Aaron
Sent: Sunday, July 10, 2011 4:36 PM
To: Rubenson, Aaron; venezia-leads@amazon.com; Peracha, Zahur; Sands, Rob; Kelton, Alana; Taylor, Amber; Mathiesen, Thomas; Rouse, Alex; Liang, Jonathan
Cc: May, Johanna; Okereke, Mekka; McKeague, Sean; Kortekaas, Ryan; Evans, Ethan; Bianco, Antonio; Paleja, Ameesh; Adkins, James; Overton, Adam; Maroo, Bhavyesh; Mehta, Chirag
Subject: Venezia Leads Meeting
When: Monday, September 26, 2011 2:00 PM-3:30 PM (UTC-08:00) Pacific Time (US & Canada).
Where: CONF US SEA27 05.103 (16) | 6-5000 #373294

Adding video conference info for A2Z

Our Video Conferencing is in: conf us sna3 Turing and the IP address is 172.26.56.162. Please let me know if you need anything further.

New leads meeting room in SLU 27.

Aaron

amazon appstore for Android

IAP Launch Marketing Plan

Overview

The target audience of our Amazon Appstore for Android In-App SDK (IAP) launch marketing is both app developers and Android owners including new and existing Amazon Appstore for Android customers. The goal is to offer an easy solution for in-app purchasing to our developers while offering a secure, easy way for customers to purchase consumable and non-consumable items as well as subscriptions.

The core value proposition for the store remains "The Amazon Appstore for Android provides the best deals on the best Android apps including a paid app for free, every day." To incorporate IAP vendors in this positioning, we are currently in talks with developers such as Conde Nast Publications, Time Direct Ventures, comiXology, and other gaming companies to incorporate our IAP solution into their apps. The IAP Beta partners are also key partners for our impending Otter announcement and launch. We will be weaving our Beta partners into Otter launch marketing activities as well as doing specific marketing for the IAP Beta and GA launches on the Amazon Appstore for Android.

There are four primary phases for the IAP launch marketing:



Developers

For developers, our IAP solution offers a flexible solution that meets the needs of large and small developers. The solution is "dead simple" for developers to integrate and reduces integration effort.

Customers

For the customer, the Amazon Appstore for Android is delivering apps with in-app purchasing and subscription options to literally bring more content to customers' fingertips.

CONFIDENTIAL Amz_FTC_0037822

amazon appstore for Android

Customer Experience

"IAP" isn't a concept widely known by customers. Outside of news reports and blog postings on IAP regulations, and customer forum discussions about kids making too many IAP purchases[1] IAP as a concept/app option isn't widely discussed. On Android Market and iTunes, IAP apps show up in the Top Grossing, but there are no dedicated marketing slots for these apps.

To help customers discover apps, we will surface IAP apps on existing merchandised placements throughout the Amazon Appstore and Amazon Appstore handles (such as Facebook and Twitter). Our customer touchpoints include:

- On-site placements within the Amazon Appstore
- On-site placements on other storefronts around Amazon.com
- E-mail
- Social, including Facebook and Twitter
- Mobile advertising driving awareness of specific titles in the Amazon Appstore
- Search Engine Marketing (SEM)
- Mobile placements in the Mobile Shopping app

On-site placements within the Amazon Appstore

Customers are not looking for apps based on how much they cost or what else they can get in the app[2]. On the Amazon Appstore storefront, we know customers are clicking into different categories to find apps both in the left nav and the 6-pack, and then clicking into the automated recommendations to discover apps that are similar to their purchase/browsing history. Based on this, we need to merchandise IAP apps based on where customers go to look for specific titles/types of app(s) that fit a certain need/want. In order to get IAP apps in front of customers where customers are looking for relevant titles, we will incorporate IAP titles into our existing merchandised placements on the homepage of the Amazon Appstore, on the category pages (where applicable), and on the deals page. We will also be deprecating the "Magazines" node and replacing it with a new category page called "Newsstand." See Appendix A for the wireframe of this page. This new category page will give us the opportunity to merchandise subscription apps where customers would normally be looking for them. The concept of "Newsstand" also maps to the experience customers are used to in the Kindle storefront and the experience that has been built into Kindle Fire.

On-site placements on other storefronts around Amazon.com

On an ongoing basis, when we have big titles come into the Amazon Appstore (such as Angry Birds or Plants vs. Zombies) we promote the titles throughout the Amazon Appstore as well as on other relevant storefronts. In addition to big titles, we have done cross promotions with apps we feel will bring in new

[1] October 19 2011: Ars Technica – "Apple facing class-action lawsuit over kids' in-app purchases" – April, 2011
[2] October 19, 2011: Amazon Analytics – A9 search results: top queries driving traffic to the Amazon Appstore include: "Android free apps (paid keyword)," "Amazon Appstore (paid keyword)," "Netflix," "Angry Birds," "free games for Android (paid keyword)," "free apps (paid keyword)," "amazon apps (paid keyword)," "iTunes for Android (paid keyword)," "free app of the day," "facebook," "tablet apps for Android (paid keyword)," "angry birds," "free," "Kindle"

customers and/or complement customers' shopping habits. Example of this include merchandising Oceanhouse Media's Dr. Seuss titles on the Dr. Seuss physical books so that people who are interested in Dr. Seuss books know that we have apps that they can buy to expand the content they have already shown they enjoy with a new more interactive experience. We have done similar things with games, such as Emily's Taste of Fame where we got an exclusive on the app title and did a cross promotion with the digital video games team to make customers who were interested in this specific title know about the app and vice versa. IAP apps will be no different. To get apps that complement content customers are already browsing or purchasing in front of the right customers, we will do cross promotions when appropriate. We will specifically focus on cross promotions with video games (digital and hardlines) and periodicals (Kindle and hardline). We will not limit cross promotions to these groups, but the majority of IAP apps fall into these two buckets, so we will continue to work closely with the respective teams on promotional activities. When IAP apps launch that have the same title available in different versions (e.g. game or magazine), we will schedule HQPs on the ASIN detail page of the shared-title ASIN. We will also run right rotos and/or site stripes on the periodicals and games storefronts targeted at known Android users driving awareness of the apps we have available that customers may enjoy.

In addition to cross-site promotions on other Amazon.com storefronts, we will surface IAP apps to Gateway when the title warrants it. We may group apps in promotional placements; for example, we'll run a bunk bed graphic with multiple periodical IAP titles driving to the Newsstand category page, or we'll run a right roto with a specific ASIN title the day the ASIN launches if it's an exclusive or hits our Gateway promotion tenets. Gateway promotion tenets are:

- Appeals to a wide audience of known Android owners
- Has good ratings, if the app is new to our store it must have good ratings on Android Market or iOS; if the app is new period, other apps from the vendor must have good ratings
- Works on the majority of Android handsets
- Works on Kindle Fire

E-mail

E-mail has proven to be one of our strongest marketing tools. We use e-mail to:

- Attract net new customers from the existing Amazon.com customer base
    - Attract a critical mass of net new customers from the existing Amazon.com customer base
    - Attract net new customers from the existing Amazon.com customer base on an ongoing basis (as customers come in to Amazon.com or self-qualify themselves through activity on Amazon.com)
    - Convert Amazon Appstore browsers into customers
- Nurture Amazon Appstore Customers to compel them to purchase more apps
- Attract net new customers from outside of Amazon.com

As an overarching theme for the Amazon Appstore e-mails, we will never be aggressive.

CONFIDENTIAL Amz_FTC_0037824

During the Beta phases of IAP, we will weave all of the Beta titles into targeted e-mails going to our customer set as well as new target customer sets. E-mail types include e-mails to new customers, e-mails to existing customers who have shown a propensity to click into and purchase via e-mail, e-mail to new Android device owners, and e-mail to target customers (customers we know have Android devices who have not shopped from the Amazon Appstore yet). E-mail placements will vary based on app types, the placement options are the hero image in the top of an e-mail, an e-mail stripe, or a line-list e-mail inclusion in one of two rows of ASINs.

Social: Facebook and Twitter

Over the past few months we have put a lot of effort into building our social lists both on Facebook and Twitter. Social is a great opportunity to let customers/fans know about great apps including discounted and exclusive titles as well as apps we think customers will love that haven't been surfaced yet. All Beta IAP titles will be included in social outreach with a mention of the app as well as any promotions (where relevant) around that app title.

Mobile advertising driving awareness of specific titles in the Amazon Appstore

We use Mobile advertising primarily to attract new customers to the Amazon Appstore. We will continue running mobile advertising through Q4 2011. There are four distinct mobile advertising models:

1) Mobile ad, leading to landing page with generic creative
2) Mobile ad, leading to landing page with ASIN-specific creative
3) Mobile ads for APK-only downloads
    a. We tested with generic Amazon Appstore creative and ASIN-specific creative
    b. With the ASIN-specific creative, if customers already had the Amazon Appstore installed, they were directed to the detail page of the app in the Amazon Appstore
4) Mobile ads leading to ASIN-specific/Amazon Anywhere landing page

We will incorporate IAP titles into mobile advertising following models three and four targeting the ad at similar titles. For example, we might run a mobile banner ad for The New York Times in other free news apps or financial apps. We will run ads for all vendors who get their app in by mid-November running creative for at least one of their titles up to a max of 30-IAP Beta partners. We will not commit to spend or impressions, instead we will optimize based on creative. For some titles, we will introduce a fifth model where we'll drive customers to a custom landing page for the app that includes highlights of some of the goods people can find within the app. We will use our existing ad spend to cover this testing up to a max of $100K.

Search Engine Marketing (SEM)

On an ongoing basis we're running search campaigns in Google, Bing, and Yahoo!, driving traffic to the Amazon Appstore as well as to specific titles. We will create custom search campaigns for each of the IAP Beta titles during the Beta phase to ensure they get picked up in our SEM campaigns. The length the campaigns live depends entirely on the success of the campaign (if customers click through and make a purchase) so we cannot guarantee a specific spend on SEM per vendor or title.

amazon appstore for Android

Mobile placements in the Mobile Shopping app

Through the end of Q4'11, we have been allotted four days when we can run ads in the Mobile Shopping app. We are using two of these dates to showcase great FAD apps, one of these dates to showcase the Amazon Appstore deal during "Digital Week," and we'll assign one date to an IAP app launch in our store. The target dates are:

November 15th: Big Fish games title
November 30th: Gameloft title (based on what's performing)
December 26th: Big deal on Game app for Digital Week
December 30th: App TBD

CONFIDENTIAL Amz_FTC_0037826

Developer Recruiting

During the Beta period IAP outreach will be done from the account management team directly to targeted developers. We are offering merchandising packages to all Beta invite vendors (see Appendix B). During the Beta period we will not do outreach to the developer community at large about our impending IAP offering.

Beta Launch PR

On September 28th there was a press event where Jeff Bezos presented Otter and showcased a handful of apps working on Otter. Some of these included publications such as Vanity Fair and GQ. While Jeff did not explicitly call out our IAP solution, it may be assumed. We will not be doing IAP press outreach at this time; instead, the account management team will respond to developer inquiries via Yuma. Requests from developers to participate in our Beta program will also be managed through the account management team.

When Otter is publically available on 11/15, customers will be able to begin purchasing in-app goods and subscriptions via our IAP solution from apps in our Beta group.

GA Launch PR

When we are able to open our IAP solution up to the developer community at large in March, we will run a bigger outbound developer marketing focused PR campaign that includes a press release and media alerts about the GA of IAP. We will run announcements on the Amazon Appstore Developer Portal, send an email to our developer list, and run an announcement on the AWS blog and in AWS emails. We will also have our two spokespeople (Aaron Rubenson and Ameesh Paleja) participate in press interviews about our IAP solution where they will be prepared to answer questions about the business reason for offering IAP solutions to customers, and the technical differentiators. We may include quotes from IAP Beta partners as well as public stats (such as top grossing apps based on IAP) in the press outreach.

Target publications include:

Android Bloggers

Android Central	Android Guys	AndroidSPIN
Android Community	Talk Android	The Droid Guy

Trades and Tech/Mobile Enthusiasts

This is My Next	ZDNet	PC Magazine
Phone Scoop	ReadWriteWeb	CNET
IntoMobile	TechCrunch	Gizmodo
Boy Genius Report	Engadget	
TechFlash	GeekWire	Seattle Times

Steady State Marketing and Merchandising

Once the IAP launch period is over our marketing around IAP apps and IAP developer successes get woven into our 'steady state' marketing and our goals remain customer acquisition, customer retention and loyalty as well as developer and app acquisition and IAP adoption. We will continue to leverage our existing marketing tools (free app of the day (FAD) – launch date of FAD for freemium specifically TBD, exclusives, automated merchandising via Zeitgeist – launch date for a new Best Sellers tab fed by Zeitbeist for freemium specifically TBD, e-mail, mobile advertising, PR, SEO/SEM, social, and partner marketing) as we work to turn initial trial into adoption of the Amazon Appstore for Android as the preferred vendor and retailer of Android applications including IAP applications.

We will work with the Product Management team to prioritize FAD as an option for IAP apps. When the capability is in place (date TBD) our persistent offer of FAD will include freemium apps which will prove to be the best use of the FAD placement for developers and this slot provides a great call-to-action using direct response tools (e-mail and mobile). Ongoing retention and re-engagement efforts will also leverage exclusives and the PR opportunities they present.

Lastly, we will launch Associates for the Amazon Appstore online first and then extend it to mobile Associates during the Beta phase of IAP. Associates will make money off new customer bounty payouts of $3 and ongoing referrals of 10% rev share and will include rev share against IAP goods and subscriptions purchased.

Success Metrics

The metrics we are measuring ourselves against during the IAP launch window is freemium app downloads and IAP purchases. New customer acquisition will also be measured but is not tied directly to IAP.

amazon appstore for Android

Appendix A: Newsstand Category Page



amazon appstore for Android

Appendix B

amazon.com	2011-2012 Marketing Schedule							
QUARTER	CAMPAIGN LOCATION	SLOT NAME	FREQUENCY	TIMING	START	END	RATE	NOTES
Amazon.com								
	Gateway			1-week				Not guaranteed for all titles.
Social								
	Appstore Facebook	Facebook						
	Appstore Twitter	Twitter						
Appstore								
	Appstore homepage	6-pack	100%	1-week				
	Appstore homepage	Right roto - big deal	100%	13-days				
	Appstore Category page	Right roto	100%	7-days				
E-mail								
	Appstore email		100%	1-day				
TOTAL								

EXHIBIT 160

From: Paleja, Ameesh
To: Paleja, Ameesh; Evans, Ethan; Ryder, Paul; Adkins, James
Sent: 6/20/2012 12:26:27 AM
Subject: RE: Sales Prevention Feature Question



That's the plan, will let you know what legal thinks tomorrow

-----Original message-----
From: "Adkins, James" <adkins@amazon.com>
To: "Paleja, Ameesh" <ameesh@a2z.com>, "Ryder, Paul" <pryder@amazon.com>, "Evans, Ethan" <ethan@amazon.com>
Sent: Wed, Jun 20, 2012 00:20:11 PDT
Subject: RE: Sales Prevention Feature Question

I'd keep the password check for IAP in place (and I think at the $20 level), given the continued high return rates on IAP. Agree w/ Paul that good to be guided by further data, of course.

On the 17 year thing – per our previous email, Ameesh – I'd kill it. If legal comes back with disagreement, I'd say we should discuss together w/ them.

From: Paleja, Ameesh
Sent: Tuesday, June 19, 2012 9:26 PM
To: Ryder, Paul; Adkins, James; Evans, Ethan
Subject: RE: Sales Prevention Feature Question

I asked about the $50 limit too and alex said this would limit number of transactions to less than 1%, cs contacts might go up again.

-Ameesh

From: Ryder, Paul
Sent: Tuesday, June 19, 2012 8:44 PM
To: Paleja, Ameesh; Adkins, James; Evans, Ethan
Subject: RE: Sales Prevention Feature Question

I think if we have data that our issue was kids, maybe we should retest given the new parental controls with Congo +. If it was fraud, then we need more fraud tools... Data on specific apps and cs feedback should guide us here... I'm fine with keeping in place as we work through the data. Thought we raised it to $50 though?

Paul
Amazon.com

-----Original Message-----
From: Evans, Ethan [ethan@amazon.com]
Received: Tuesday, 19 Jun 2012, 8:31pm
To: Paleja, Ameesh [ameesh@a2z.com]; Adkins, James [adkins@amazon.com]; Ryder, Paul [pryder@amazon.com]
Subject: RE: Sales Prevention Feature Question

I think UNTIL we have better fraud controls we leave the $20 check in.

Paul – a fraud SDE will be coming to you in the "in advance of 2013 OP1 positions" list later tonight, so we will get working on this. Once we have our own fraud team in place and better controls, we can go back and remove this.

Acceptable plan? I think a good balance of reality (fraud) and CX (plan to streamline soon)

From: Paleja, Ameesh
Sent: Tuesday, June 19, 2012 8:01 PM
To: Adkins, James; Ryder, Paul; Evans, Ethan
Subject: Sales Prevention Feature Question
Importance: High

Judgment call I could use your opinion on to change or not change. We currently have a password check if an IAP item is $20.00 or higher even if you haven't enabled parental controls. We did this because of high customer contacts on kids "accidently" purchasing high ASP items in games. I wasn't in the meeting with Jeff so hard for me to judge whether or not this meets the bar but we put it in place to address CS contacts and it has helped mitigate the problem significantly.

We are validating with legal about the 17 and older check right now but intend to pull that out. These are the only 2 things we have found in our audit.

-Ameesh

EXHIBIT 176

From: Grier, Ben
To: Harbut, Michael
Sent: 1/9/2014 6:01:11 PM
Subject: RE: password challenge rule

Thanks!

Benjamin Grier | Senior Product Manager | Amazon Appstore
bgrier@amazon.com | +1 949 527 4126

From: Harbut, Michael
Sent: Thursday, January 09, 2014 5:24 PM
To: Grier, Ben; Li, Lei; Rothschild, Michael
Cc: Dexter, Jeff; Haddad, Anthony
Subject: RE: password challenge rule

So that everyone is clear on the PW prompt scenarios, below are the scenarios that would generate a PW prompt:

With parental controls enabled on a device, customer initiates an in-app purchase.
With parental controls disabled on a device, customer initiates an IAP purchase for the very first time.
With parental controls disabled on a device, customer initiates an in-app purchase that costs more than $19.99 USD.
With parental controls disabled on a device, customer initiates a second in-app purchase within five minutes.

Note: After the customer has entered their password, they are not prompted again for 60 minutes due to the frequency of their purchases. They will be prompted again in less than 60 minutes, however, if the parental controls setting is enabled, the item costs more than $19.99 USD, or the item is within an app with a high refund rate.
With parental controls disabled on a device, customer initiates an in-app purchase within an app (for specific ASINs) that the Appstore team has identified as having a high refund rate.

Note: This prompt does not occur if the customer has entered their password within the previous 15 minutes. Entering their password starts the grace period timer again, and the prompt won't display for these identified ASINs for 15 more minutes.

Also note, that on Otter1 devices, the PW prompt threshold is $1 and not $19.99 like on other devices.

Thanks,

Michael

From: Grier, Ben
Sent: Thursday, January 09, 2014 5:20 PM
To: Li, Lei; Rothschild, Michael; Harbut, Michael
Cc: Dexter, Jeff; Haddad, Anthony
Subject: RE: password challenge rule



+Michael Harbut, IAP PM

We work similarly on tablets to what Miki described.

However, there is one more case in which the tablet customer is password-challenged for IAP when parental

controls are off:

If the customer is making an IAP purchase that is $19.99 or above, they will get prompted (unless there has been a previous successful IAP challenged purchase with the last 60 minutes).

Benjamin Grier | Senior Product Manager | Amazon Appstore
bgrier@amazon.com | +1 949 527 4126

From: Li, Lei
Sent: Thursday, January 09, 2014 6:11 AM
To: Rothschild, Michael; Grier, Ben
Cc: Dexter, Jeff; Haddad, Anthony
Subject: RE: password challenge rule

Thanks a lot, it is clear now J

From: Rothschild, Michael
Sent: 2014年1月9日 14:14
To: Li, Lei; Grier, Ben
Cc: Dexter, Jeff; Haddad, Anthony
Subject: RE: password challenge rule

If parental controls are disabled ->

1) For paid apps – no password challenge.

2) For IAP – password challenge for the first IAP purchase, then for some time period (I think 5 minutes) you can do subsequent IAP purchases without password challenge prompt.

The underlying reason that IAP purchases are protected even without parental controls is that there is potential for high expenses if someone gets his hands on your phone.

From: Li, Lei
Sent: Wednesday, January 08, 2014 10:07 PM
To: Rothschild, Michael; Grier, Ben
Cc: Dexter, Jeff; Haddad, Anthony
Subject: RE: password challenge rule

My question is when user parent control is disabled (turn off) and IAP purchase is enable (turned on),

For paid app and IAP purchase, does user still need input password?

From: Rothschild, Michael
Sent: 2014年1月9日 14:02
To: Li, Lei; Grier, Ben
Cc: Dexter, Jeff; Haddad, Anthony
Subject: RE: password challenge rule

On Android, when parental settings are enabled we surface password challenge on each IAP purchase (vs only on the first IAP purchase when they are off).

On Kindle, same as Android but also on Paid apps.

Not sure why there is a difference between these but I have in Android client backlog to look at changing it. This is traditionally how it was and documented across all our screens and help on Android client.

As for MCB, I will send you the latest mock-ups we have tomorrow (don't have VPN connection at the moment).

Thanks,

Miki

From: Li, Lei
Sent: Wednesday, January 08, 2014 9:49 PM
To: Rothschild, Michael; Grier, Ben
Cc: Dexter, Jeff; Haddad, Anthony
Subject: RE: password challenge rule

Yes, when user need to input password for purchasing paid app and IAP items assuming IAP setting is on and parent control setting is off?

My thought: if user needs to input password (due to our password challenge rule) after choosing carrier billing (below 2nd box) , we can remove additional confirmation button (e.g. below 3rd box).

BR Li Lei

<< OLE Object: Picture (Device Independent Bitmap) >>

From: Rothschild, Michael
Sent: 2014年1月9日 13:02
To: Li, Lei; Grier, Ben
Cc: Dexter, Jeff; Haddad, Anthony
Subject: RE: password challenge rule

Hi Li Lei,

Can you clarify what you mean by "password challenge logic"? Is it when we use password challenge?

Also, I am not sure what you mean by double confirm in CB – IMPOV there is only one confirmation when you enable CB.

Thanks,

Miki

From: Li, Lei
Sent: Wednesday, January 08, 2014 4:54 PM
To: Rothschild, Michael; Grier, Ben
Cc: Dexter, Jeff; Haddad, Anthony
Subject: password challenge rule

Hi Miki, Ben

Could you share what is password challenge logic on both mobile client and Kindle Fire?

I am thinking that there is no need of double confirm for carrier billing if there is password challenge already. thanks.

黎镭 Li Lei Jeff

Product Manager, Amazon China

MP: 13910311092 Office ext. 010-85567944

<< OLE Object: Picture (Device Independent Bitmap) >>

EXHIBIT 179

From: Cook, Cristopher
Sent: Saturday, January 25, 2014 2:35 PM
To: Harbut, Michael
Subject: Re: quick question on the password prompt logic
Attachments: image002.png; image003.png

Ok. Cool.
What is you're plan for sending out the doc again?

Should I hold off on adding in the changes I made this AM tip we hear from Alex or put them in now so we can send something tonight?
Additionally do you want one version of the "Window Approval warning" in an appendix in case it comes up?

Thanks!

-Cris

--
Cristopher Cook | UX Designer | criscook@amazon.com

From: <Harbut>, Michael <mharbut@amazon.com>
Date: Saturday, January 25, 2014 at 2:25 PM
To: "Cook, Cristopher" <criscook@amazon.com>
Subject: RE: quick question on the password prompt logic

For now. We may get rid of the window and possibly the 19.99+, but this is good for now ☺

From: Cook, Cristopher
Sent: Saturday, January 25, 2014 2:19 PM
To: Harbut, Michael
Subject: Re: quick question on the password prompt logic

Oops.

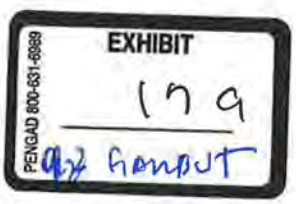

Current

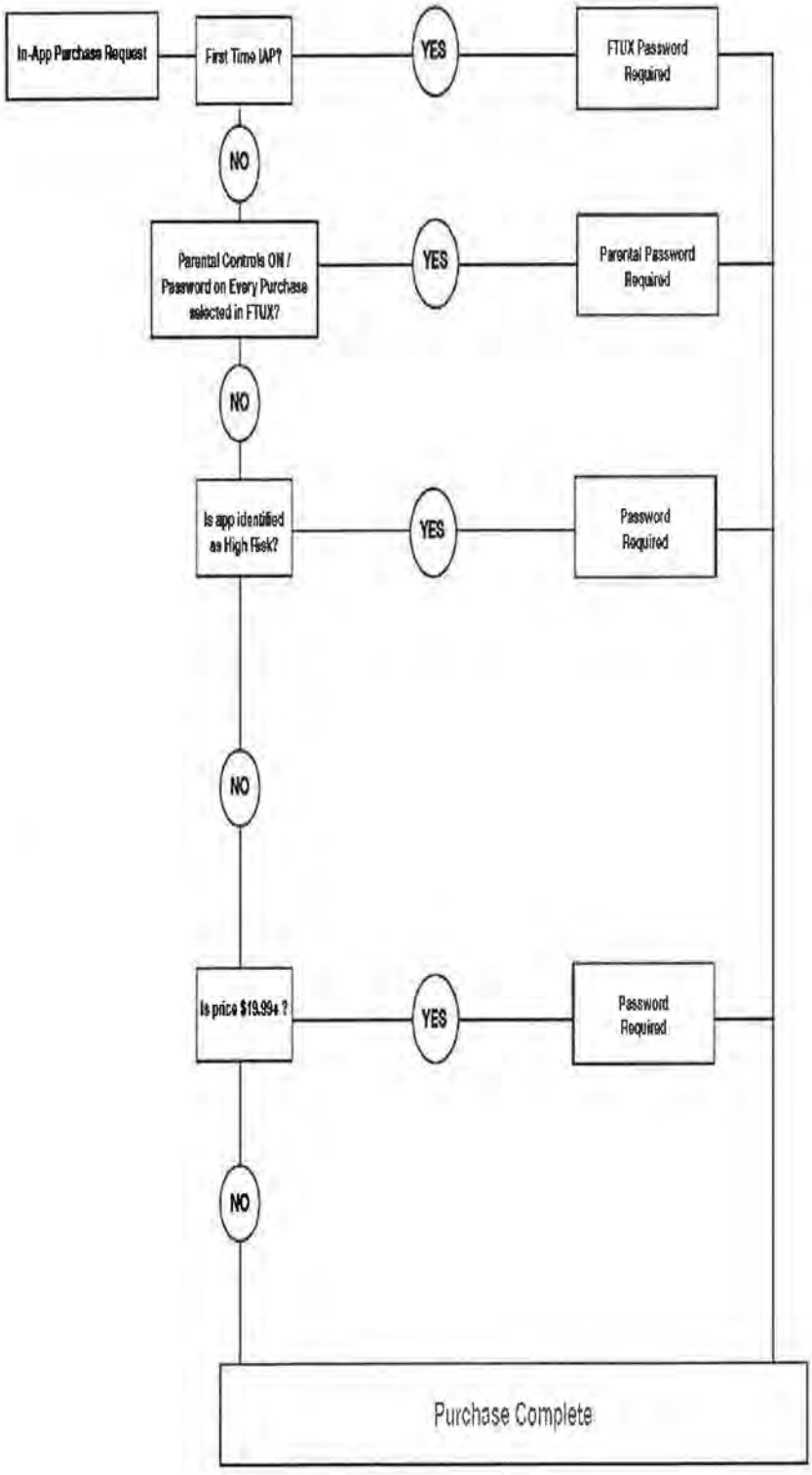
In-App Purchase Request
First Time IAP?
YES
FTUX Password Required
NO
Parental Controls ON / Password on Every Purchase selected in FTUX?
YES
Parental Password Required
NO
Is app identified as High Risk?
YES
Password Required
NO
Is price $19.99+ ?
YES
Password Required
NO
Purchase Complete

--
Cristopher Cook | UX Designer | criscook@amazon.com

From: <Cook>, "Cook, Cristopher" <criscook@amazon.com>
Date: Saturday, January 25, 2014 at 2:18 PM
To: "Harbut, Michael" <mharbut@amazon.com>
Subject: Re: quick question on the password prompt logic

Cool. I'm going to suggest we just do this and not text then. The text is super confusing.
We can just put text for the KF 1 caveates. Is that OK?

Here's the proposed. Just to be clear on the proposed you are suggesting we remove the windows all together?

Thanks!

--
Cristopher Cook | UX Designer | criscook@amazon.com

From: <Harbut>, Michael <mharbut@amazon.com>
Date: Saturday, January 25, 2014 at 2:16 PM
To: "Cook, Cristopher" <criscook@amazon.com>
Subject: RE: quick question on the password prompt logic

This is correct. Way to go. The logic is complicated. This makes it easier to understand.

From: Cook, Cristopher
Sent: Saturday, January 25, 2014 2:12 PM
To: Harbut, Michael
Subject: Re: quick question on the password prompt logic

Does this make any sense? Perhaps we can talk on the phone for a few minutes to clarify?
206-999-9296

CONFIDENTIAL

Current

Privileged & Confid

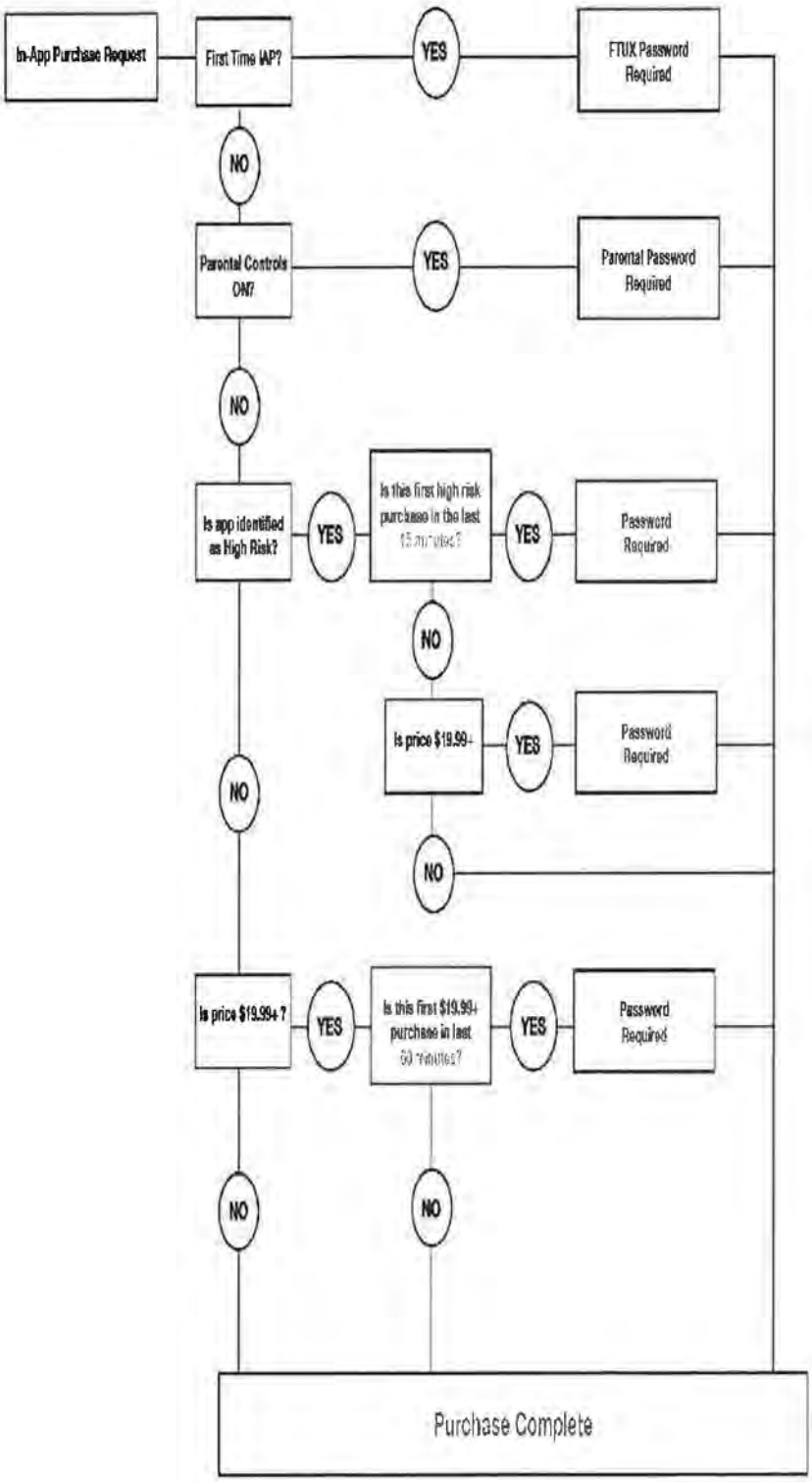

With parental controls enabled on a device, customer initiate in-app purchase.

With parental controls disabled on a device, customer initiat an in-app purchase for the very first time.

With parental controls disabled on a device other than KF1, customer initiates an in-app purchase for an item that costs $19.99 USD and above.
Note: Subsequent purchases <$19.99 that are not high-risk made within 60 minutes will not be prompted.

With parental controls disabled on KF1, customer initiates a app purchase for an item that costs $1.00 USD and above.
Note: Subsequent purchases <$1.00 that are not high risk m within 60 minutes will not be prompted.

With parental controls disabled on a device, customer initiat a purchase within an app the Appstore team has identified a being high risk.
Note: Subsequent purchases <$1.00 on KF1 or <$19.99 on c devices that are not high risk made within 15 minutes will nc prompted.

--
Cristopher Cook | UX Designer | criscook@amazon.com

From: <Harbut>, Michael <mharbut@amazon.com>
Date: Saturday, January 25, 2014 at 2:08 PM
To: "Cook, Cristopher" <criscook@amazon.com>
Subject: RE: quick question on the password prompt logic

Yes, unless it's a subsequent purchase within 15 minutes

From: Cook, Cristopher
Sent: Saturday, January 25, 2014 2:03 PM
To: Harbut, Michael
Subject: Re: quick question on the password prompt logic

Is every high risk app triggering password?

--
Cristopher Cook | UX Designer | criscook@amazon.com

From: <Harbut>, Michael <mharbut@amazon.com>
Date: Saturday, January 25, 2014 at 1:58 PM
To: "Cook, Cristopher" <criscook@amazon.com>
Subject: RE: quick question on the password prompt logic

I believe it would only trigger the 15 minute window. High risk takes priority.

From: Cook, Cristopher
Sent: Saturday, January 25, 2014 1:51 PM
To: Harbut, Michael
Subject: Re: quick question on the password prompt logic

Do the window overlap?
For example I buy a high risk $29.99 app. Does it trigger both windows to start running?
--
Cristopher Cook | UX Designer | criscook@amazon.com

From: <Harbut>, Michael <mharbut@amazon.com>
Date: Saturday, January 25, 2014 at 1:43 PM
To: "Cook, Cristopher" <criscook@amazon.com>
Subject: RE: quick question on the password prompt logic

Correct.

From: Cook, Cristopher
Sent: Saturday, January 25, 2014 1:40 PM
To: Harbut, Michael
Subject: Re: quick question on the password prompt logic

Sorry it doesn't.
The way it reads is that if it's < 19.99 I should never be prompted no matter what.
Based on this statement:

CONFIDENTIAL

"With parental controls disabled on a device other than KF1, customer initiates an in-app purchase for an item that costs $19.99 USD and above."
So if it's under that = no password.

The way I'm reading it the windows don't make sense if password protection is turned off.

–
Cristopher Cook | UX Designer | criscook@amazon.com

From: <Harbut>, Michael <mharbut@amazon.com>
Date: Saturday, January 25, 2014 at 1:32 PM
To: "Cook, Cristopher" <criscook@amazon.com>
Subject: RE: quick question on the password prompt logic

If it's >= 19.99 or high risk, then it will be prompted. If it's <19.99 and not high risk within the 60 minute window, then it won't be prompted. Does that make sense?

From: Cook, Cristopher
Sent: Saturday, January 25, 2014 1:30 PM
To: Harbut, Michael
Subject: quick question on the password prompt logic

I'm working on making a diagram of the rules and this struck me odd specifically the note on **less than** < $19.99. If the price is less than that it wouldn't need prompting anyway correct. Did you mean **greater than** >?

With parental controls disabled on a device other than KF1, customer initiates an in-app purchase for an item that costs $19.99 USD and above.

Note: Subsequent purchases <$19.99 that are not high-risk made within 60 minutes will not be prompted.

–
Cristopher Cook | UX Designer | criscook@amazon.com

EXHIBIT 180

From: Patel, Mayank
To: Harbut, Michael
Sent: 1/27/2014 8:30:52 AM
Subject: RE: IAP Rule

For non high risk, we prompt on second purchase within 5 minutes. For high risk, we prompt on first purchase.

Sent from my Windows Phone

From: Harbut, Michael <mailto:mharbut@amazon.com>
Sent: 1/26/2014 9:11 PM
To: Patel, Mayank <mailto:mayankp@amazon.com>
Subject: IAP Rule

Another IAP rule that I'm unfamiliar with:

When a second IAP purchase is made within 5 minutes, a password challenge dialog is presented. A customer enters the Amazon password to successfully complete the IAP purchase. Once the customer has entered the correct Amazon password, the password challenge dialog is not shown for 60 minutes due to frequent IAP purchases. However, the customer may still be prompted for the password, if the parental controls setting is enabled or if the IAP item costs more than the maximum price of $20 USD.

I thought after the first purchase, all purchases within 60 minutes do not require a prompt (15 minutes if high risk). Am I confusing myself?

Come see me as soon as you get in.

Thanks,

Michael

